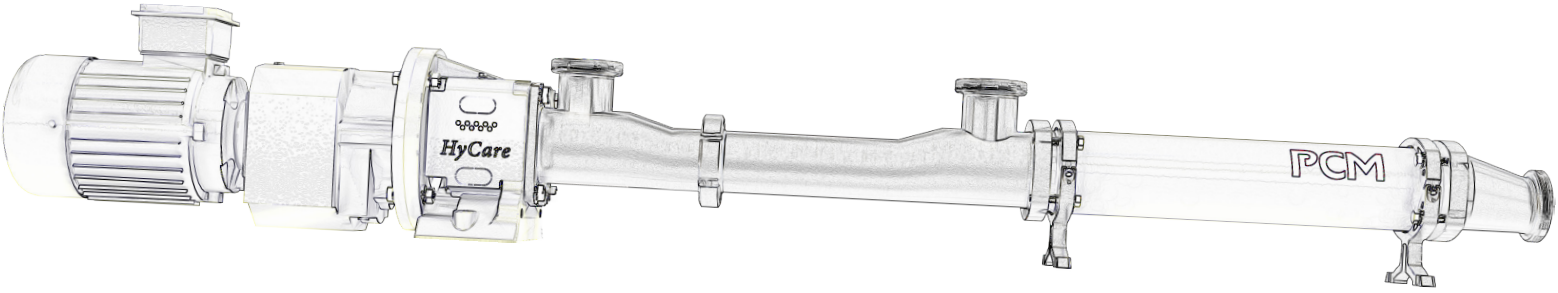

PCM Moineau™

HyCare™

Technical document

- Options
- Pump code
- Materials and finishing
- Performance curves
- Pump size comparison charts
- Spare parts interchangeability chart
- Pump diaphragm
- General arrangement drawings

PCM Keep it moving

OPTIONS

		Standard	3-A	EHEDG
Body connections	Stainless steel 316L body with upward tangential connection and vertical CIP connection	●	●	
	Stainless steel 316L body with left tangential connection and vertical CIP connection	○	○	●
	Stainless steel 316L body with right tangential connection and vertical CIP connection	○	○	○
	Stainless steel 316L body with upward tangential connection	○		
Inlet/Outlet connections	SMS connections	●		
	Clamp connections	○	●	
	Varivent connections	○	○	○
	DIN 11851 connections	○		
	DIN 11864-1 (A type) connections	○	○	●
Body design	One part body	● ≤ 13HY12	● ≤ 13HY12	● ≤ 13HY12
	Two parts body (DIN 11851 connection)	● > 13HY12		
	Two parts body (DIN 11864-1 connection)		● > 13HY12	● > 13HY12
Shaftline	Duraflex titanium flexible shaft and duplex stainless steel 329LN rotor	● ≤ 13HY12	● ≤ 13HY12	● ≤ 13HY12
	Duraflex titanium flexible shaft and stainless steel 316L rotor	● > 13HY12	● > 13HY12	● > 13HY12
Sealing	Cartridge single mechanical seal carbide/ carbide EPDM	●		
	Cartridge single mechanical seal carbide/ carbide EPDM with flush	○		
	Cartridge single mechanical seal carbide/ carbide FDA 3A		●	
	Cartridge single mechanical seal carbide/ carbide FKM - FDA 3A with flush		○	
	Cartridge single mechanical seal carbide/ carbide EPDM - EHEDG			●
	Cartridge single mechanical seal carbide/ carbide EPDM - EHEDG with flush			○
Stator	NBR white (Food EU)	●		●
	FKM white (Food FDA/3A)	○	●	
	NBR black (USP)	○		

● Standard arrangement
○ Available option

		Standard	3-A	EHEDG
Pipe	Eccentric discharge pipe	●	●	●
	Eccentric discharge pipe with CIP back connection	○	○	○
	Upward discharge pipe	○	○	
Accesories	Hygienic stator security system	○	○	○
	Drive cover	○	○	○
	Counter SMS connection	○		
	External frequency inverter	○	○	○
	Pressure gauge	○	○	○
	Pressure transmitter	○	○	○
	Pressure switch	○	○	○
	Multifunction pressure sensor	○	○	○
Baseframe	Stainless steel 316L baseplate with adjustable feet	○		○
	Stainless steel 316L baseplate with adjustable feet 3-A compliant		○	
Painting	Standard painting, RAL 9010 white	●	●	●
Documents	French/English manual + multi languages CD with the pump	●	●	●
	Extra French/English manual + multi languages CD to be sent by mail	○	○	○
Test report	Test report and pump operating conditions data sheet to be sent by mail	○	○	○

● Standard arrangement
○ Available option

Pump Code

25 HY 12 - 3A

Hydraulic size

Serie
HY=HyCare

Pressure stage
6 = 1 stage
12 = 2 stages
18 = 3 stages
24 = 4 stages

Construction
3A = 3-A
EH = EHEDG

Materials and finishings

	Body	Rotor	Duraflex Shaft	Stator	Baseframe	Gaskets (body)
Materials	Stainless steel 316 L	**< 13H12** Duplex Stainless steel 329 LN **> 13H12** Stainless tell 316 L	Titanium	NBR white (Food) FKM white (Food FDA/3A) NBR Black (USP)	Stainless steel 304	Standard: EPDM 3-A: Silicone EHEDG: EPDM (L shape gaskets)
Finishings	**Internal:** Polished Ra < 0.8 **External:** Shot peened Ra 1.6	**<13H12** Polished Ra < 0.8 **>13H12** Polished Ra < 0.8	Ra < 0.8	-	Shot peened	-

Pump Curves

05HY12 to 6HY24

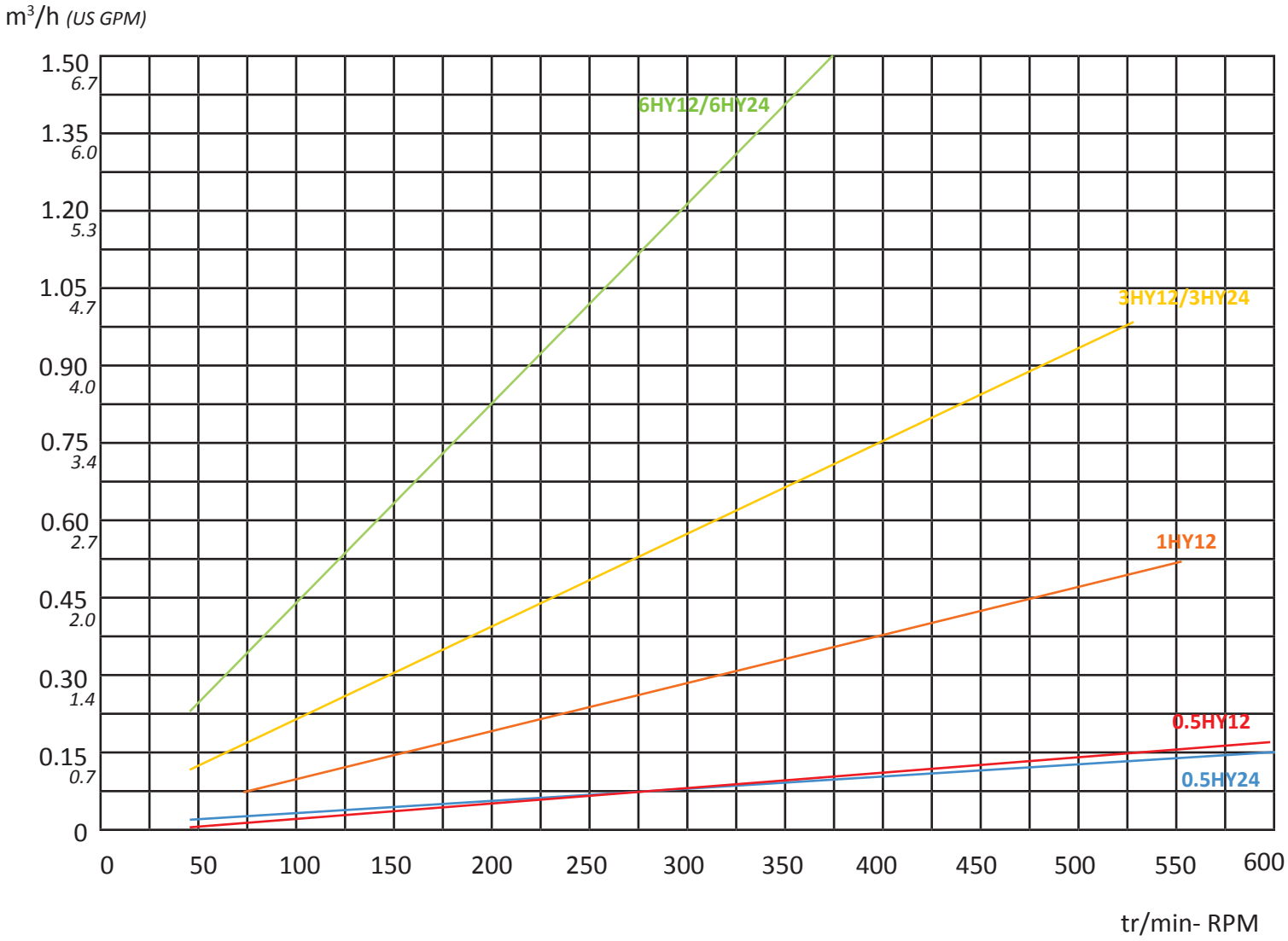

Please note that HyCare™ performances can vary from H Series.

13HY6 to 90HY12

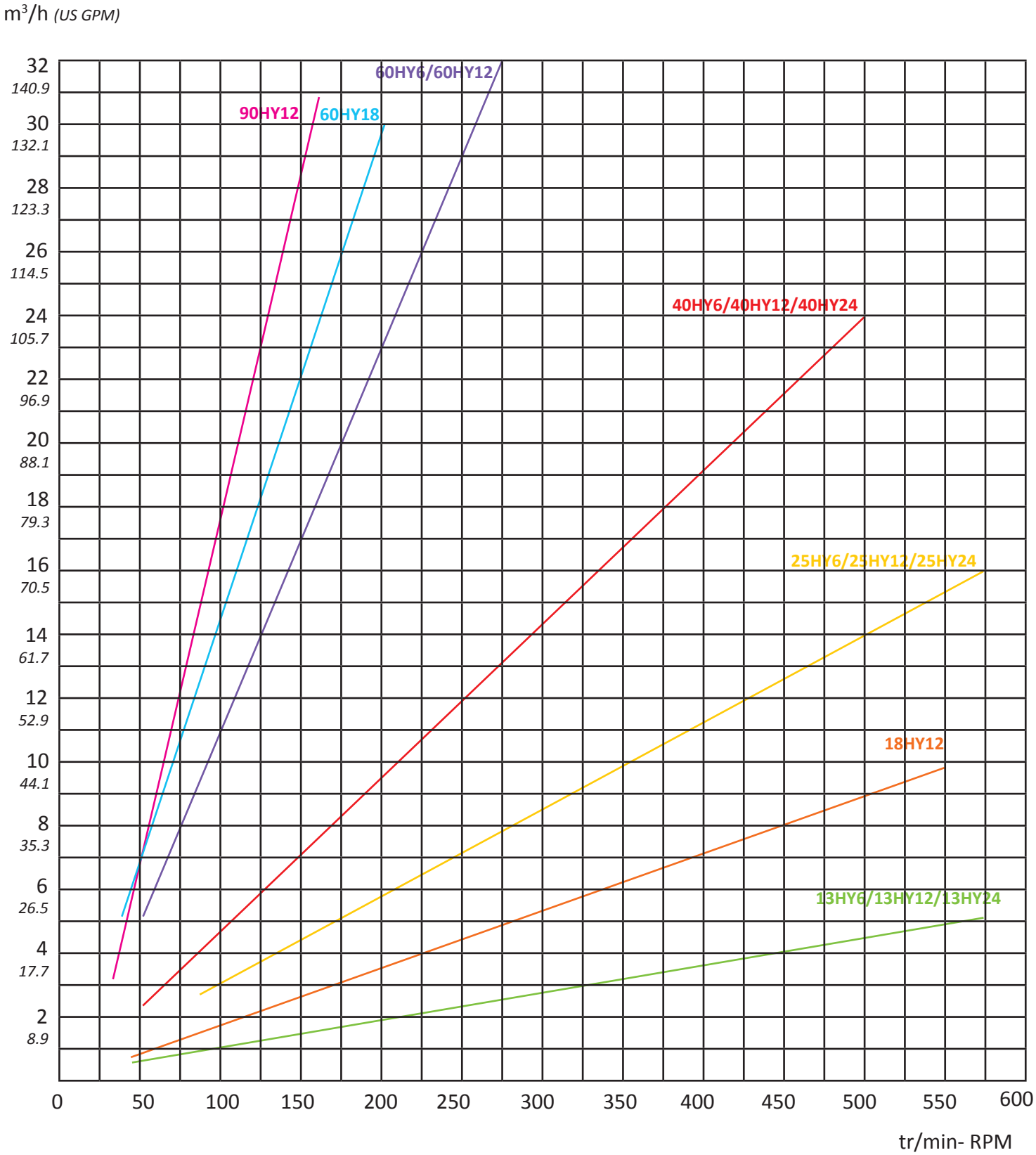

Please note that HyCare™ performances can vary from H Series.

Pump size comparison charts

HyCare™	H Serie	EcoMoineau™ C	I Serie
05HY12	0.4H12	05C12S	0.4I10
05HY24	0.4H24	05C24S	0.4ID10
1HY12	1H12	1C12S	1I10
3HY12	2.6H12	3C12S	2.6I10
3HY24	2.6H24	3C24S	2.6ID10
6HY12	6H12	6C12S	6ID5 / 6I10
6HY24	6H24	6C24S	6I20
13HY6	13H6	13C6S	13I5
13HY12	13H12	13C12S	13I10
13HY24	13H24	13C24S	13ID10 / 13I20
18HY12	NA	18C12S	NA
25HY6	25H6	25C6S	25I5
25HY12	25H12	25C12S	25I10
25HY24	25H24	25C24S	20I16 / 20I20 / 20ID10
40HY6	NA	40C6S	45I5
40HY12	40H12	40C12S	40ID5 / 40I10
40HY24	40H24	40C24S	35I20 / 40ID10
60HY6	60H6	60C6S	62I5
60HY12	60H12	60C12S	62ID5
60HY18	NA	NA	50I15
90HY12	90H12	90C12	NA

Please note that HyCare™ performances can vary from H Series.

Spare parts interchangeability chart

HyCare ™	STATORS	H Serie
≤ 13HY12	← →	≤ 13H12
90HY12 / 60HY6 / 60HY12/ 60HY18/ 40HY6	← →	90H12 / 60H6 / 60H12/ 60H18 / 40H6
Other models	← →	Other models

HyCare ™	ROTOR	H Serie
≤ 13HY12	← →	≤ 13H12
Other models	← →	Other models

HyCare ™	MECHANICAL SEALS	H Serie
All models	← →	All models

← → Spare parts interchangeable between HyCare™ and H Serie

← → Spare parts not interchangeable between HyCare™ and H Serie

← → HyCare™ spare parts fit with H Serie spare parts (H Serie spare parts don't fit with HyCare™ spare parts)

Pump diagram

05HY12 to 13HY12

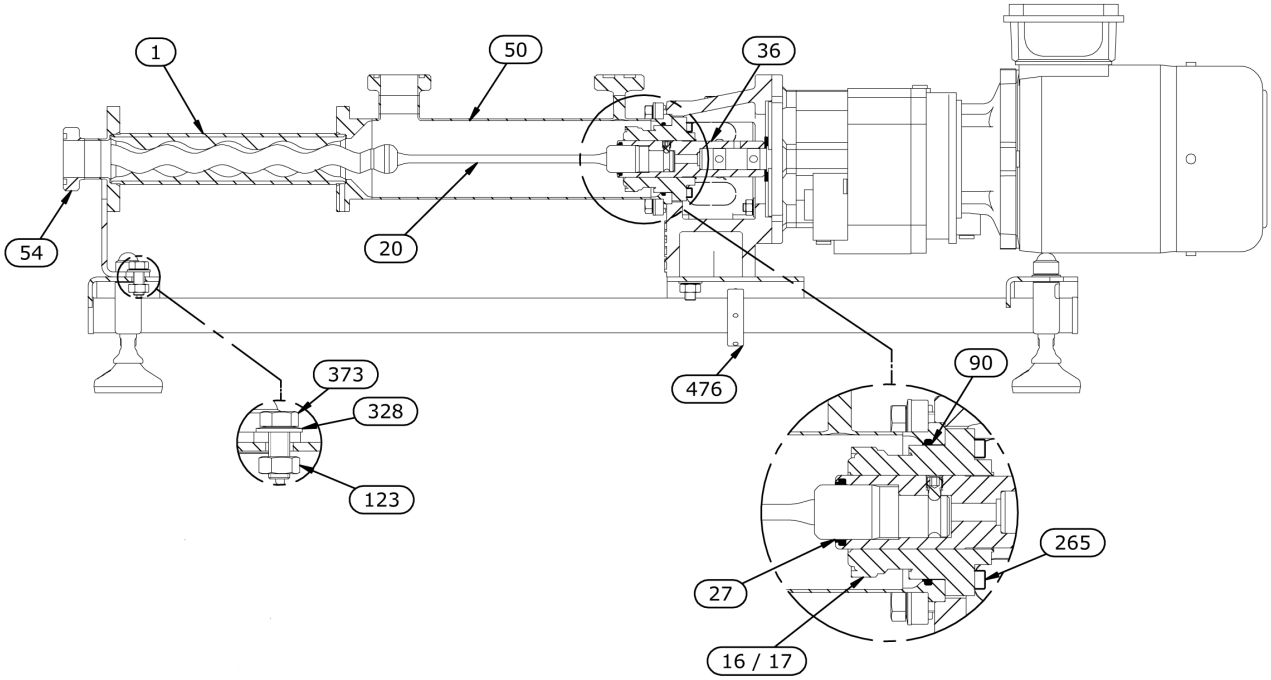

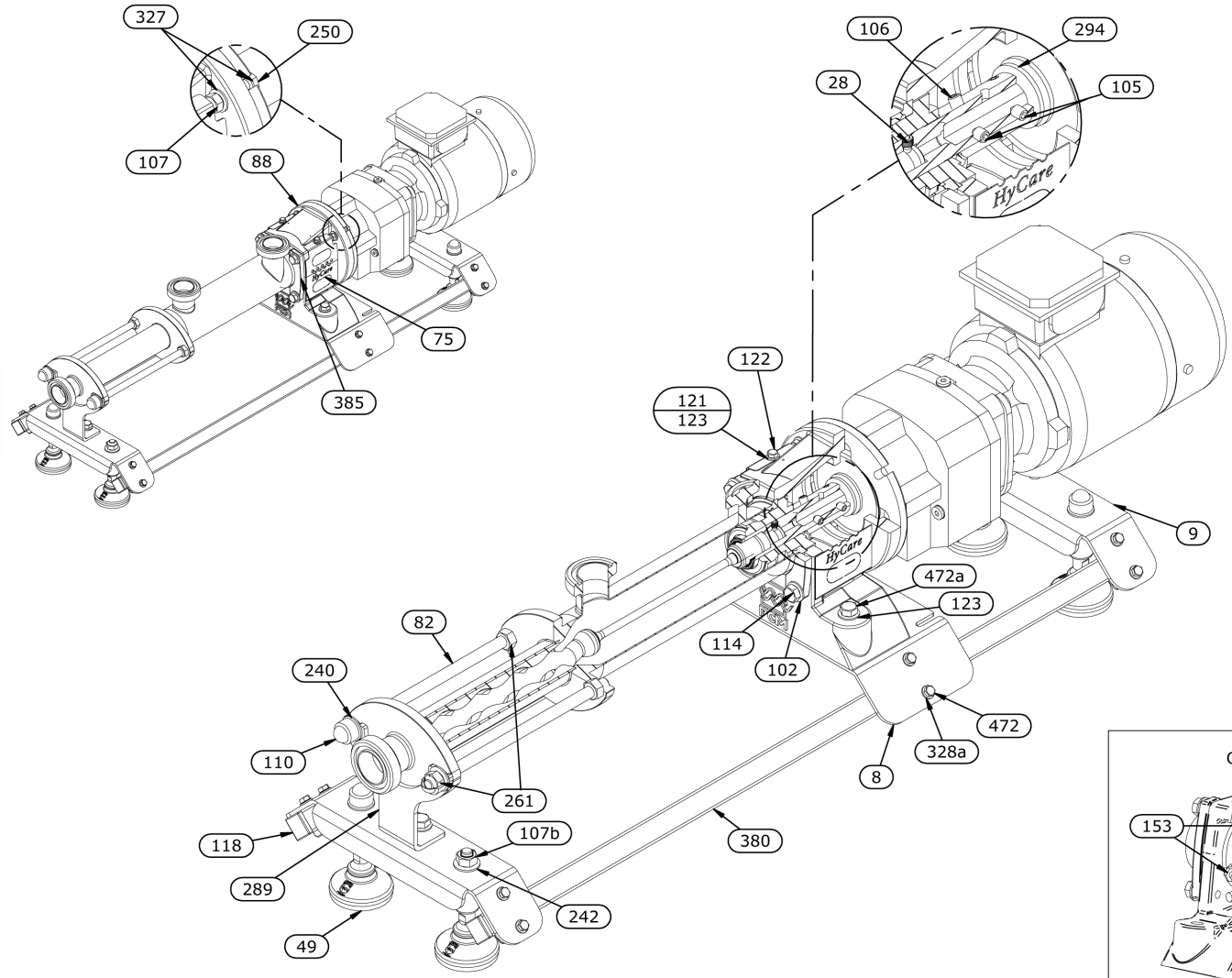

13HY24 to 90HY12

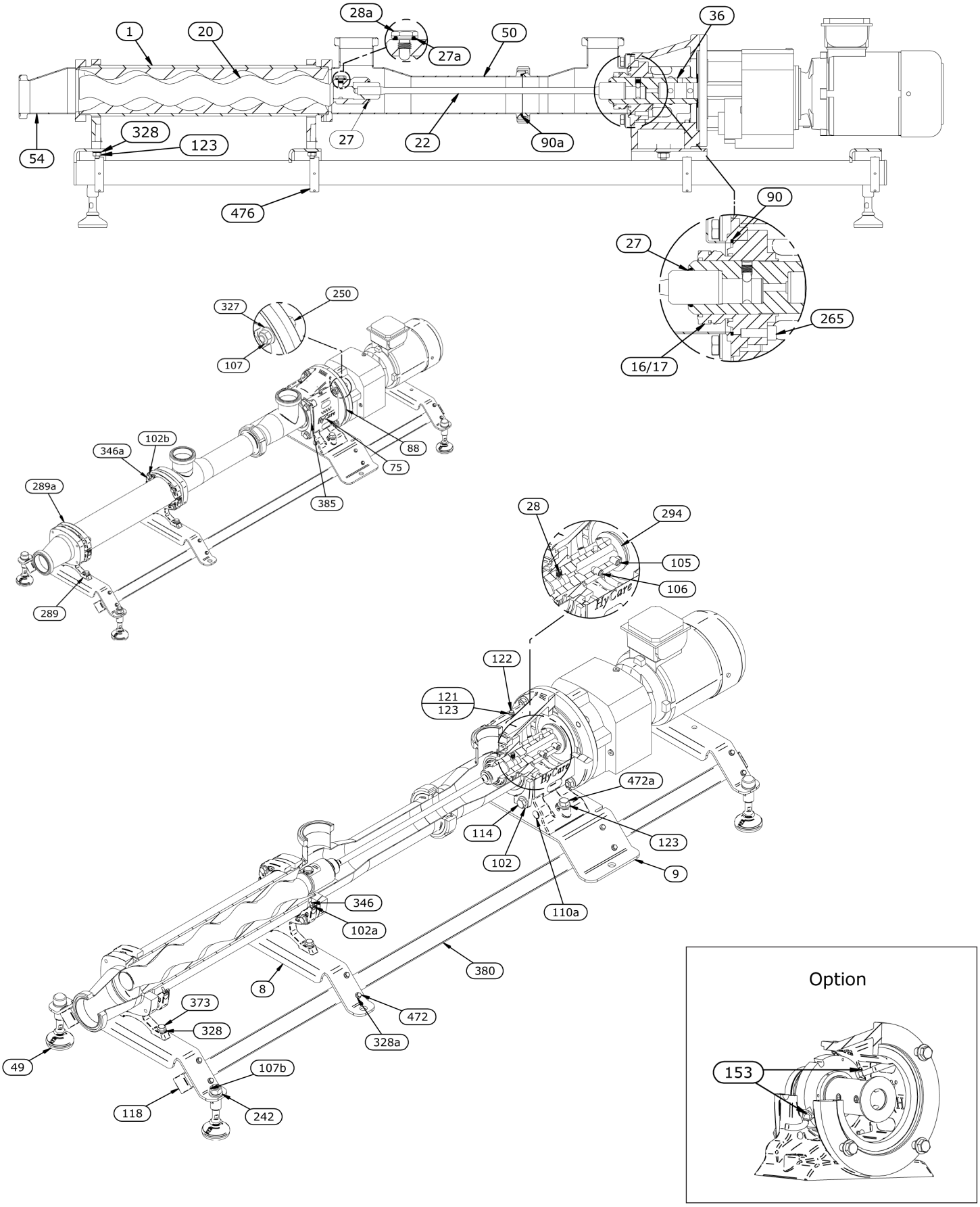

General Arrangement Drawings

05HY12 to 13HY12 (Standard pipe)

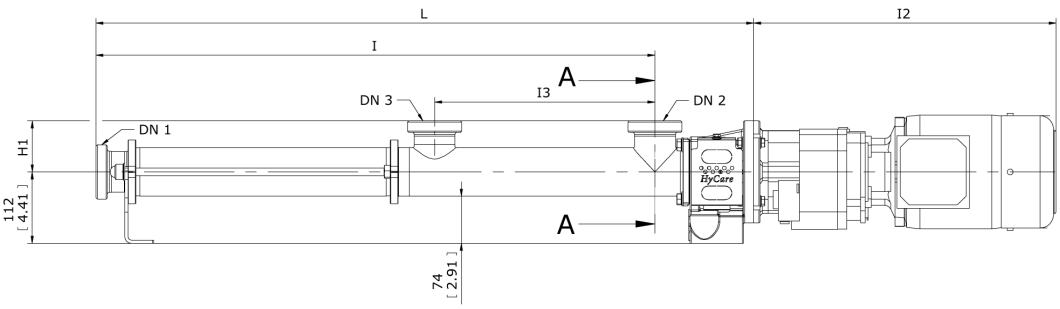

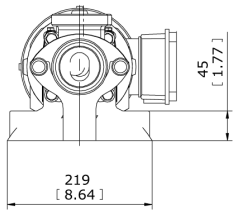

			SMS			CLAMP			VARIVENT			DIN 11851			DIN 11864-1			Weight*
	H1 mm [in]	I3 mm [in]	DN1 DN2 DN3	L mm [in]	I mm [in]	DN1 DN2 DN3	L mm [in]	I *mm [in]*	DN1 DN2 DN3	L mm [in]	I mm [in]	DN1 DN2 DN3	L *mm [in]*	I mm [in]	DN1 DN2 DN3	L mm [in]	I mm [in]	KG [Lbs]
05HY12	80 [3.14]	209 [8.22]	38	558 [21.96]	414 [16.29]	38	558 [21.96]	414 [16.29]	40	558 [21.96]	414 [16.29]	32	558 [21.96]	414 [16.29]	40	558 [21.96]	414 [16.29]	16 [35.27]
05HY24	80 [3.14]	209 [8.22]	38	658 [25.90]	514 [20.23]	38	658 [25.90]	514 [20.23]	40	658 [25.90]	514 [20.23]	32	658 [25.90]	514 [20.23]	40	658 [25.90]	514 [20.23]	17 [34.47]
1HY12	80 [3.14]	209 [8.22]	38	611 [24.05]	466 [18.34]	38	611 [24.05]	466 [18.34]	40	611 [24.05]	466 [18.34]	32	611 [24.05]	466 [18.34]	40	611 [24.05]	466 [18.34]	16 [35.27]
3HY12	80 [3.14]	209 [8.22]	38	673 [24.49]	528 [20.78]	38	673 [24.49]	528 [20.78]	40	673 [24.49]	528 [20.78]	32	673 [24.49]	528 [20.78]	40	673 [24.49]	528 [20.78]	17 [34.47]
3HY24	80 [3.14]	346 [13.62]	63.5	1049 [41.29]	894 [35.19]	63.5	1049 [41.29]	894 [35.19]	65	1049 [41.29]	894 [35.19]	65	1049 [41.29]	894 [35.19]	65	1049 [41.29]	894 [35.19]	19 [41.88]
6HY12	80 [3.14]	346 [13.62]	63.5	884 [34.80]	729 [28.70]	63.5	884 [34.80]	729 [28.70]	65	884 [34.80]	729 [28.70]	65	884 [34.80]	729 [28.70]	65	884 [34.80]	729 [28.70]	19 [41.88]
6HY24	80 [3.14]	346 [13.62]	63.5	1138 [44.80]	938 [36.92]	63.5	1138 [44.80]	938 [36.92]	65	1138 [44.80]	938 [36.92]	65	1138 [44.80]	938 [36.92]	65	1138 [44.80]	938 [36.92]	23 [50.70]
13HY6	80 [3.14]	346 [13.62]	63.5	824 [32.44]	669 [26.33]	63.5	824 [32.44]	669 [26.33]	65	824 [32.44]	669 [26.33]	65	824 [32.44]	669 [26.33]	65	824 [32.44]	669 [26.33]	19 [41.88]
13HY12	80 [3.14]	346 [13.62]	63.5	1033 [40.66]	878 [34.56]	63.5	1033 [40.66]	878 [34.56]	65	1033 [40.66]	878 [34.56]	65	1033 [40.66]	878 [34.56]	65	1033 [40.66]	878 [34.56]	24 [52.91]

* Pump weight without drive and baseframe (see «drive» chart for drive weight, baseframe weight: 11.27 kgs/ 24.84 Lbs)

Drive						
Power Kw [Hp]	0.37	0.75	1.5	2.2	3	4
Weight Kg [Lbs]	13 [28.66]	18 [39.68]	32 [70.54]	41 [90.39]	41 [90.39]	51 [112.43]
I2 mm [in]	404 [15.90]	429 [16.88]	497 [19.56]	527 [20.78]	527 [20.78]	575 [22.63]

13HY24 to 40HY12 (Standard pipe)

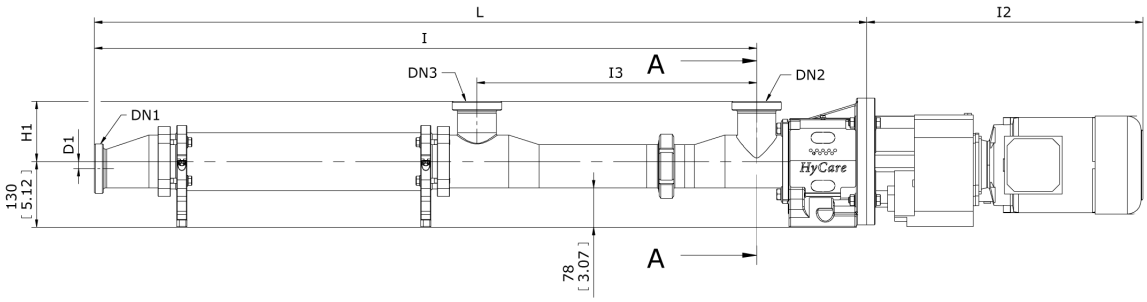

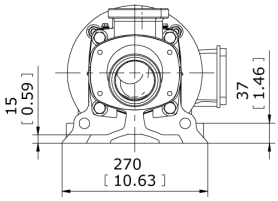

	H1 mm [in]	I3 mm [in]	D mm [in]	SMS DN1 DN2 DN3	SMS L mm [in]	SMS I mm [in]	CLAMP DN1 DN2 DN3	CLAMP L mm [in]	CLAMP I mm [in]	VARIVENT DN1 DN2 DN3	VARIVENT L mm [in]	VARIVENT I mm [in]	DIN 11851 DN1 DN2 DN3	DIN 11851 L mm [in]	DIN 11851 I mm [in]	DIN 11864-1 DN1 DN2 DN3	DIN 11864-1 L mm [in]	DIN 11864-1 I mm [in]	Weight* KG [Lbs]
13HY24	120 [4.72]	554 [21.81]	13.5 [0.53]	76	1758 [69.21]	1539 [60.59]	76	1758 [69.21]	1539 [60.59]	80	1758 [69.21]	1539 [60.59]	80	1758 [69.21]	1539 [60.59]	80	1758 [69.21]	1539 [60.59]	62.5 [137.78]
18HY12	120 [4.72]	554 [21.81]	13.5 [0.53]	76	1479 [58.22]	1259 [49.56]	76	1479 [58.22]	1259 [49.56]	80	1479 [58.22]	1259 [49.56]	80	1479 [58.22]	1259 [49.56]	80	1479 [58.22]	1259 [49.56]	65.8 [145.06]
25HY6	120 [4.72]	554 [21.81]	13.5 [0.53]	76	1248 [49.13]	1029 [40.51]	76	1248 [49.13]	1029 [40.51]	80	1248 [49.13]	1029 [40.51]	80	1248 [49.13]	1029 [40.51]	80	1248 [49.13]	1029 [40.51]	60.5 [133.37]
25HY12	120 [4.72]	554 [21.81]	13.5 [0.53]	76	1532 [60.31]	1313 [51.69]	76	1532 [60.31]	1313 [51.69]	80	1532 [60.31]	1313 [51.69]	80	1532 [60.31]	1313 [51.69]	80	1532 [60.31]	1313 [51.69]	71.2 [156.96]
25HY24	120 [4.72]	717 [28.22]	13.5 [0.53]	76	2144 [84.40]	1925 [75.78]	76	2144 [84.40]	1925 [75.78]	80	2144 [84.40]	1925 [75.78]	80	2144 [84.40]	1925 [75.78]	80	2144 [84.40]	1925 [75.78]	88.7 [195.55]
40HY6	80 [4.72]	680 [26.77]	18 [0.70]	104	1540 [60.62]	1301 [51.22]	104	1540 [60.62]	1301 [51.22]	100	1540 [60.62]	1301 [51.22]	100	1540 [60.62]	1301 [51.22]	100	1540 [60.62]	1301 [51.22]	74.3 [163.80]
40HY12	80 [4.72]	680 [26.77]	18 [0.70]	104	1956 [77.00]	1717 [67.59]	104	1956 [77.00]	1717 [67.59]	100	1956 [77.00]	1717 [67.59]	100	1956 [77.00]	1717 [67.59]	100	1956 [77.00]	1717 [67.59]	95.2 [209.88]

* Pump weight without drive and baseframe (see «drive» chart for drive weight, baseframe weight: 30.8 kgs/67.9 Lbs)

Drive									
Power Kw [Hp]	0.55	1.5	2.2	3	4	5.5	7.5	11	15
Weight Kg [Lbs]	24 [52.91]	32 [70.54]	46 [101.41]	58 [127.88]	103 [227.07]	133 [293.21]	140 [308.64]	164 [361.55]	203 [447.53]
I2 mm [in]	456 [17.95]	497 [19.56]	546 [21.499]	526 [20.70]	588 [23.14]	674 [26.53]	674 [26.53]	751 [29.56]	795 [31.29]

40HY24 to 90HY12 (Standard pipe)

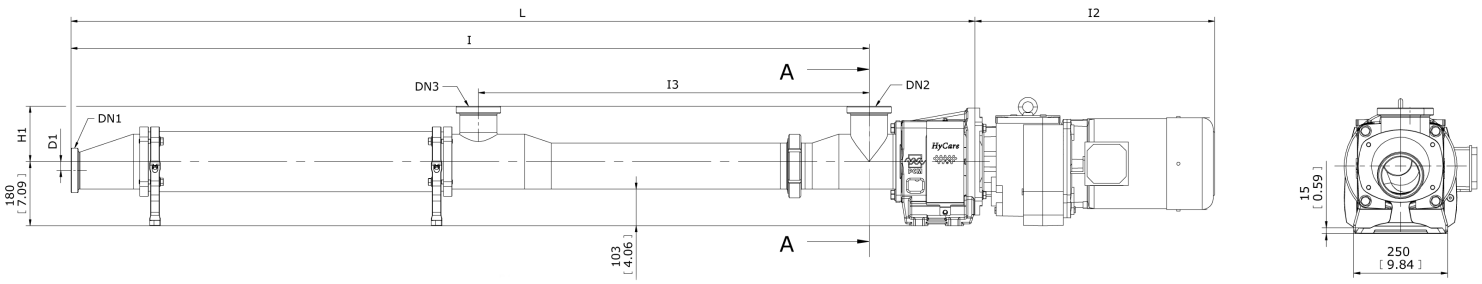

	H1 mm [in]	I3 mm [in]	D mm [in]	SMS DN1 DN2 DN3	SMS L mm [in]	SMS I mm [in]	CLAMP DN1 DN2 DN3	CLAMP L mm [in]	CLAMP I *mm [in]*	VARIVENT DN1 DN2 DN3	VARIVENT L mm [in]	VARIVENT I mm [in]	DIN 11851 DN1 DN2 DN3	DIN 11851 L *mm [in]*	DIN 11851 I mm [in]	DIN 11864-1 DN1 DN2 DN3	DIN 11864-1 L mm [in]	DIN 11864-1 I mm [in]	Weight* KG [Lbs]
40HY24	155 [6.10]	1025 [40.35]	25 [50.98]	104	2835 [111.61]	2535 [99.80]	104	2835 [111.61]	2535 [99.80]	100	2835 [111.61]	2535 [99.80]	100	2835 [111.61]	2535 [99.80]	100	2835 [111.61]	2535 [99.80]	166 [365.96]
60HY6	155 [6.10]	1025 [40.35]	25 [50.98]	104	2113 [83.18]	1815 [71.45]	104	2113 [83.18]	1815 [71.45]	100	2113 [83.18]	1815 [71.45]	100	2113 [83.18]	1815 [71.45]	100	2113 [83.18]	1815 [71.45]	135 [297.62]
60HY12	155 [6.10]	1099 [43.26]	25 [50.98]	104	2544 [100.15]	2246 [88.42]	104	2544 [100.15]	2246 [88.42]	100	2544 [100.15]	2246 [88.42]	100	2544 [100.15]	2246 [88.42]	100	2544 [100.15]	2246 [88.42]	166 [365.96]
60HY18	155 [6.10]	1099 [43.26]	25 [50.98]	104	3122 [122.91]	2824 [111.18]	104	3122 [122.91]	2824 [111.18]	100	3122 [122.91]	2824 [111.18]	100	3122 [122.91]	2824 [111.18]	100	3122 [122.91]	2824 [111.18]	218 [480.60]
90HY12	155 [6.10]	1099 [43.26]	25 [50.98]	104	3060 [120.47]	2762 [108.74]	104	3060 [120.47]	2762 [108.74]	100	3060 [120.47]	2762 [108.74]	100	3060 [120.47]	2762 [108.74]	100	3060 [120.47]	2762 [108.74]	204 [449.74]

* Pump weight without drive and baseframe (see «drive» chart for drive weight, baseframe weight: 44.4 kgs/97.8 Lbs)

Drive						
Power Kw [Hp]	3	4	5.5	7.5	11	15
Weight Kg [Lbs]	58 [127.86]	103 [227.07]	133 [293.21]	130 [286.60]	164 [361.55]	257 [566.58]
I2 mm [in]	526 [20.70]	588 [23.14]	674 [26.53]	674 [26.53]	751 [29.56]	918 [36.14]

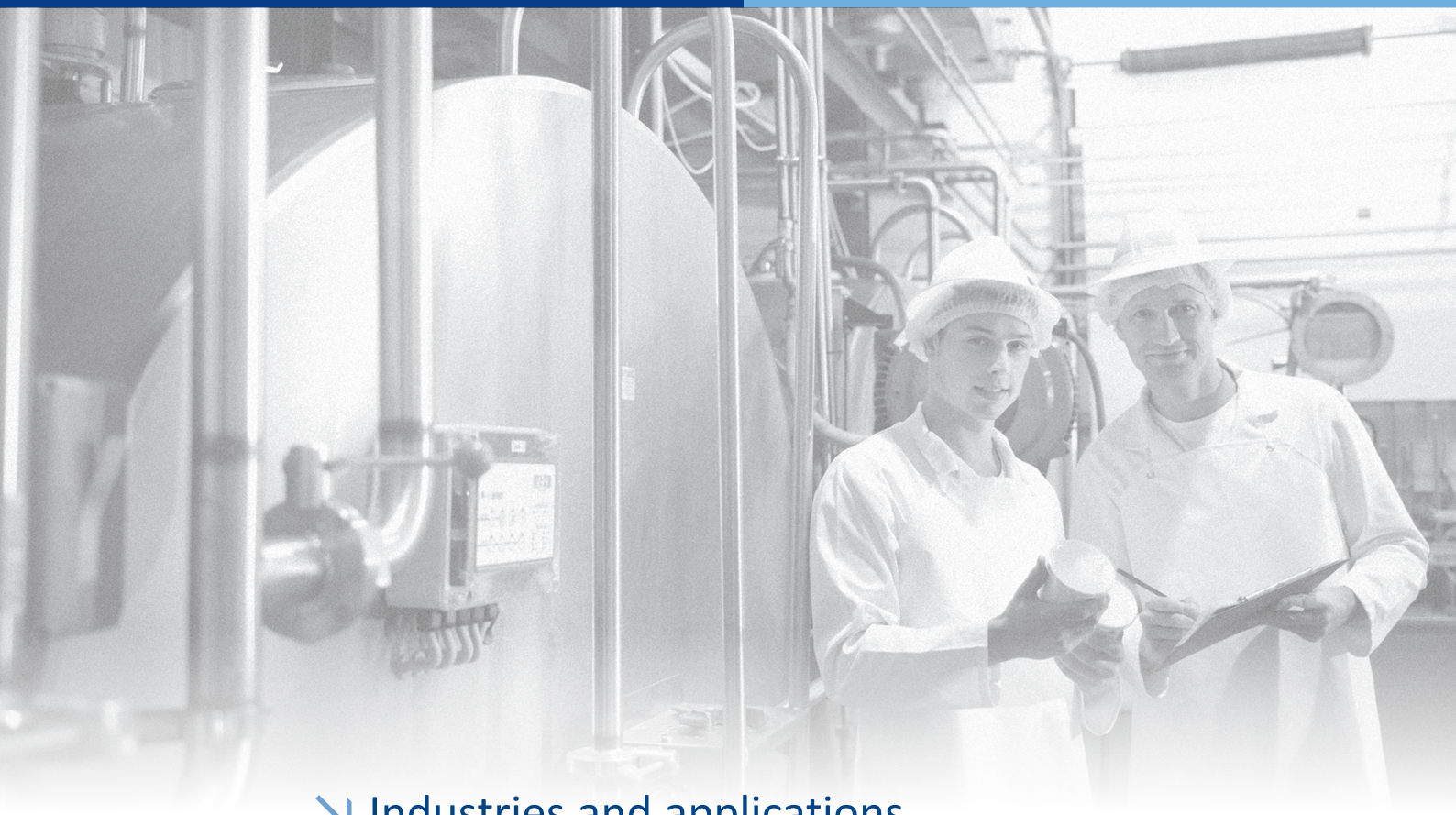

Industries and applications

In every area of the food industry

Dairy products
Stirred yoghurt, set yoghurt, curd cheese, butter, creams, desserts, ferments, rennet, milk, oil, ice cream, eggs, fruit preparations, vitamins, flavours, etc.

Meat, fish, animal feed, egg products
Meat emulsions, surfine, minced meat, fodder, chicken, fish with or without pieces, surimi, oils, flavours, colorants, fats, proteins, enzymes, etc.

Bread, cakes, pastries
Butter, jam, water, oil, eggs, yeast, dough, biscuit mix, gluten, fillings, sauces, chocolate, biscuit creams, sweet syrup, etc.

Drinks
Juice, wine dregs and pressings, fruit concentrates, beer, etc.

Fruits, vegetables
Fruit or vegetable purée , jam and jelly, fruit paste, compote...

Ready-made meals, sauces
Mayonnaise, mustard, ketchup, tomato sauce, oils, eggs, fish paste, baby food, etc.

Cosmetics and pharmaceutical products
Creams, shampoo, liquid soap, body milk, resin, oil, plant extracts, etc.

October 2012 - EN

PCM Keep it moving

www.pcm.eu